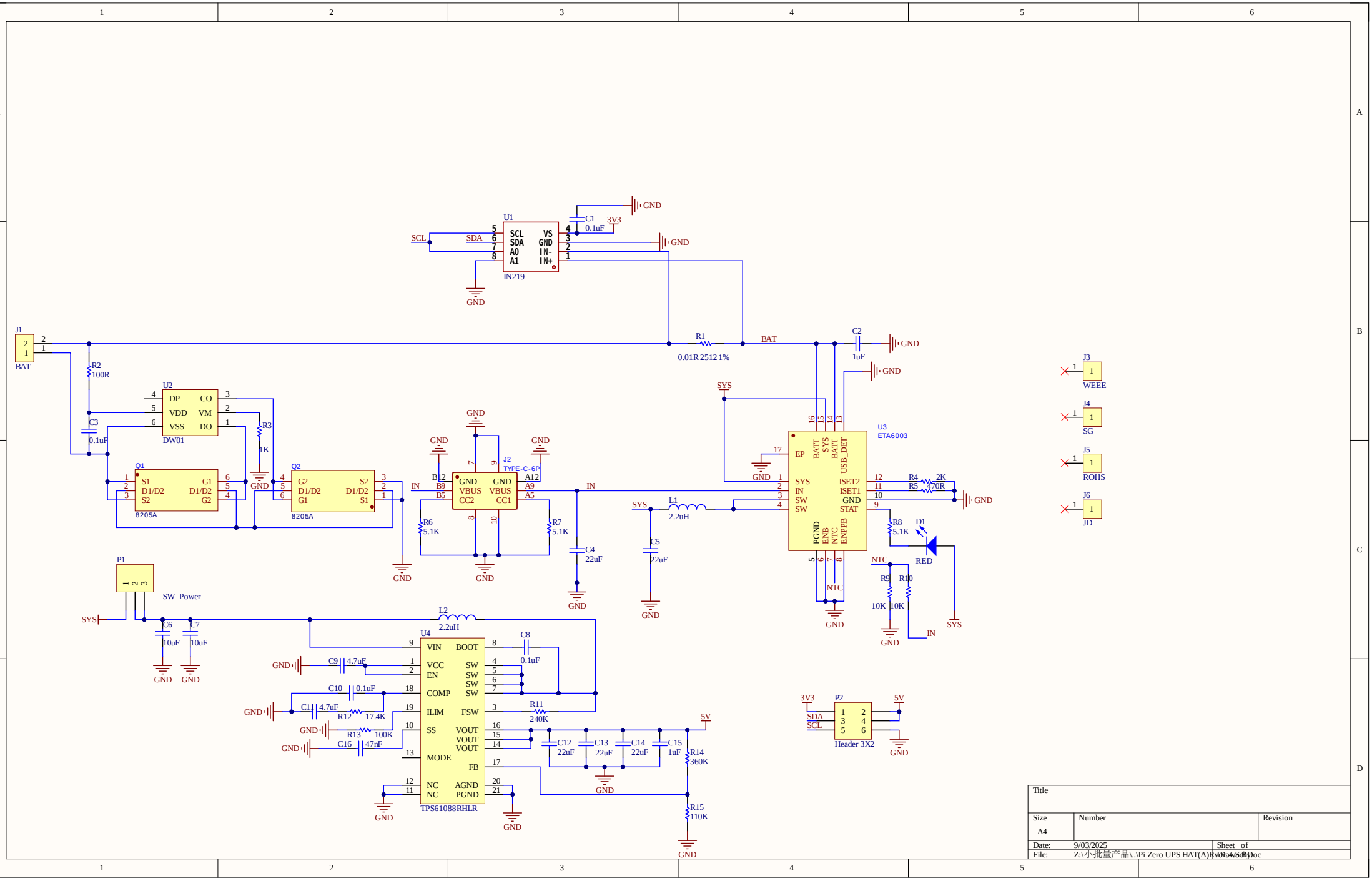

Title		
Size A4	Number	Revision
Date: 9/03/2025	Sheet of	
File: Z:\小批量产品\..\Pi Zero UPS HAT(A)Rev1.4.SchDoc		